REV. LTR.	DESCRIPTION	SIGN	DATE
1	Instead Scheme	CHENBIN	2009.08.31

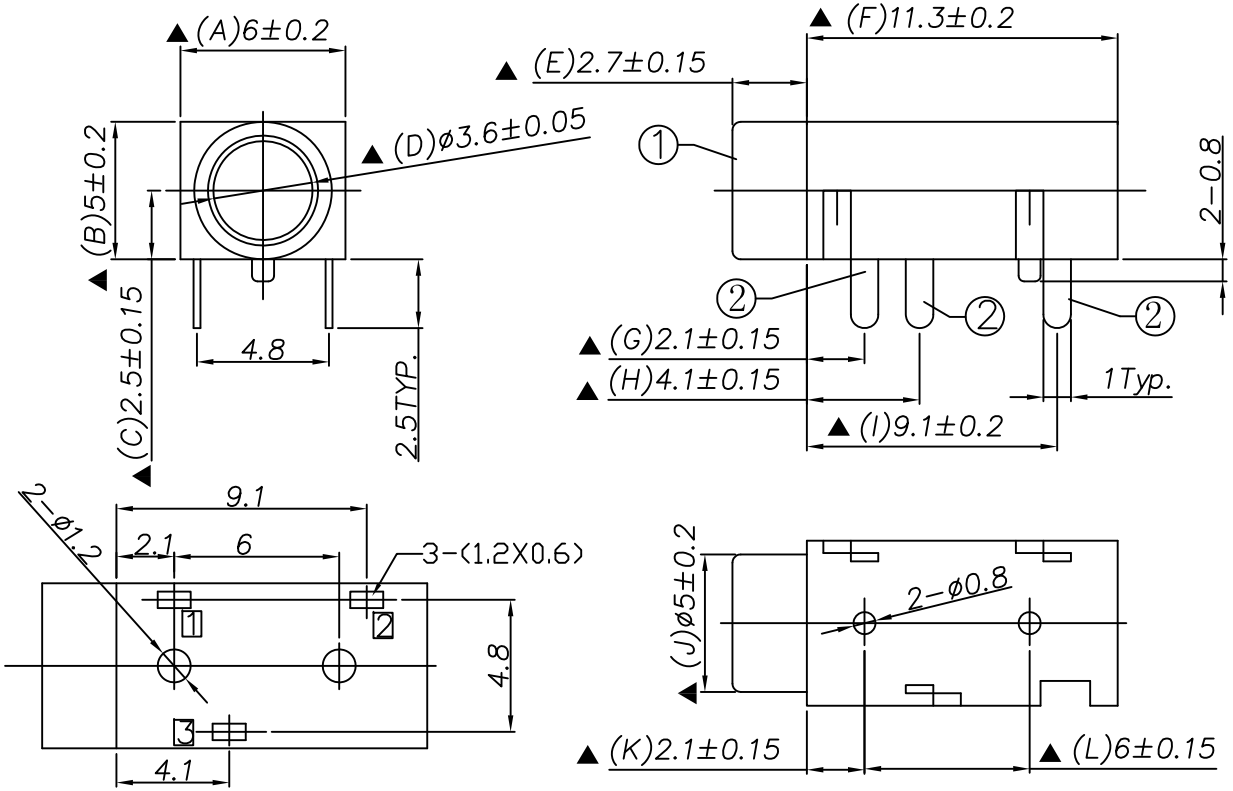

RECOMMENDED P.C.B. LAYOUT
UNSPECIFIED TOLERANCE: ±0.05
(BOTTOM VIEW)

Specification:
1. Rating : DC 30V 0.5A.
2. Contact resistance: ≤30mΩ.
   After test: ≤50mΩ.
3. Insulation resistance: ≥100MΩ (500VDC).
   After test: ≥50MΩ.
4. Withstanding voltage: 500VAC.
5. Insertion and extraction force: 3N～25N.
6. life test: 5000cycles min.
7. Operation temperature range: -20℃～70℃.
8. Preservative temperature range: -40℃～85℃.
9. Sign"▲ "is importance dimension.

Model NO.	PJ30200-D
Schematic	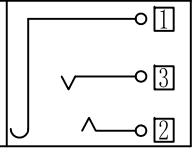

□: TERMINAL NO.

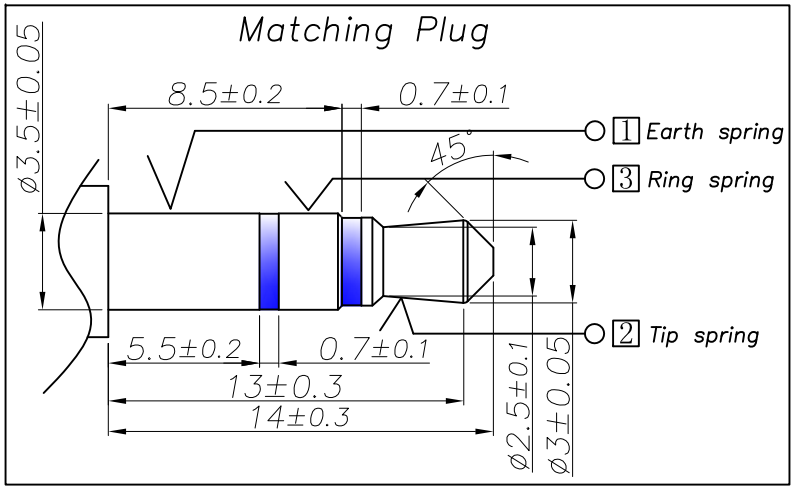

NO.	DESCRIPTION	QTY	MATERIAL	PART NO.	REMARK
②	Spring 1 2 3	3	Phosphor bronze t0.25	PJ30200-02(JA-JK0082)	Tin plating
①	Housing	1	PBT	PJ30200-S1(ST-JK0046)	

UNIT: MM	TYPE:	MODEL NO:	PAPER NO: A4		PAGE 1 OF 1	
	ø3.5 PHONE JACK	PJ30200-D	TOLERANCE	ANGLES	SCALE	VER
			±0.3	±2°	N/A	7

DESIGNER BY:	jp.K 2011.6.21	丞永實業有限公司
CHECK BY:		BLUE SOURCES ELECTRONICS CO,LTD.
APPROVED BY:		